ML6000002A

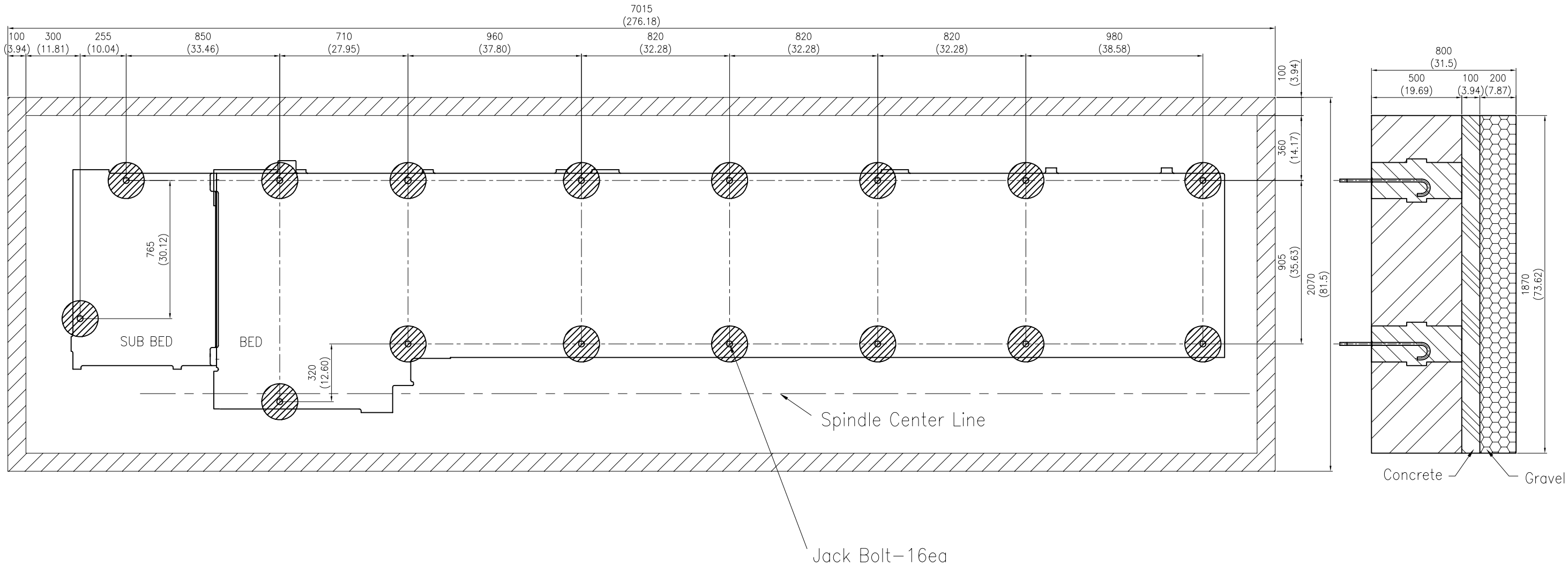

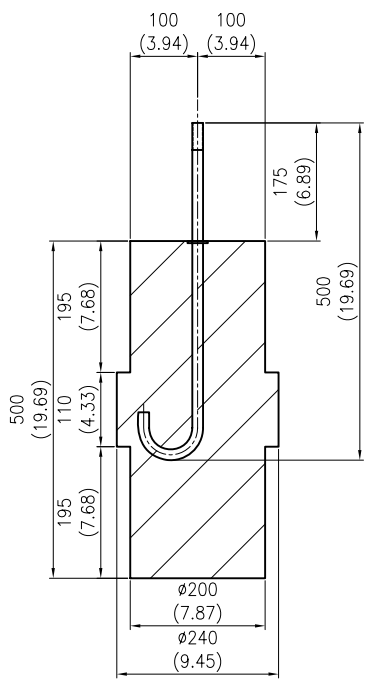

FOUNDATION BOLT DETAIL (S=2/1)

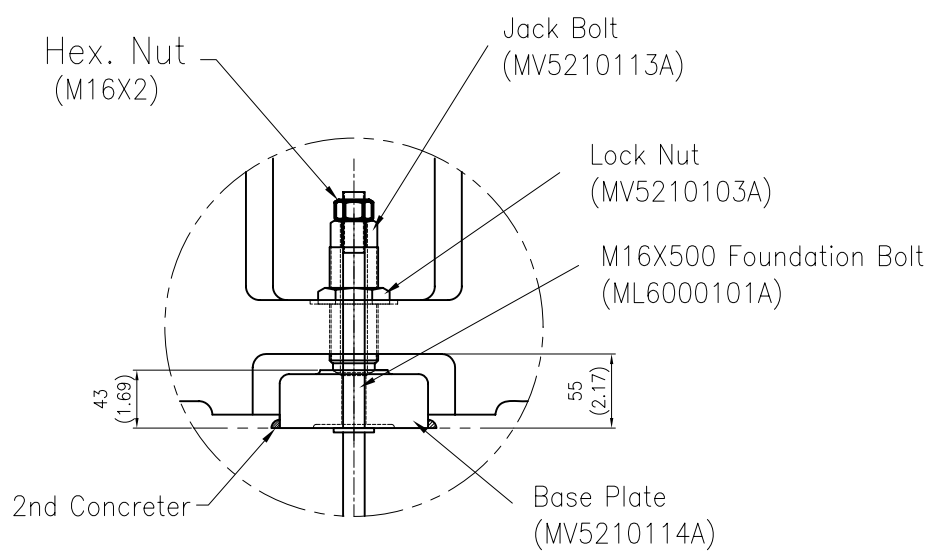

(S=4/1)

Note1) This drawing shows the standard foundation. Modify the concrete thickness according ground condition.

Before the first concrete is completely dry, chamfer the area facing the outside of the machine by approximately 100 mm.

Concrete strength (28 days after placing concrete) should be 20.6 Mpa(2986.2 psi) or more.

Note2) Because 100 mm(3.94 inch) of styrofoam must Adhere to the inside surface of ditch, dig the foundation 100 mm(3.94 inch) outside of the outline of the foundation

MARK	REVISION	DATE	REV'D	CHE'D

MODEL: PL-60, PL-60MC

APP'D	J.K.LIM 09.10.10	GENERAL TOLERANCE (MACHINING) 0.5~ 6 ± 0.1; 6~ 30 ± 0.2; 30~ 120 ± 0.3; 120~ 315 ± 0.5; 315~1000 ± 0.8; 1000~2000 ± 1.2	HEAT TREATMENT	SMEC 삼성중공업
REV'D				UNIT ASS'Y PL-60 FOUNDATION ASSY
CHE'D	C.H.MUN 09.10.08		MATERIAL / Q'TY 1/대	NAME FOUNDATION ASSY
DES'D	J.H.LEE 09.10.07	UNLESS OTHERWISE SPECIFICATION CHAMF. & CORNER CO. 3, RO. 8	PLATING / SCALE 1/11	ML6000002A 1/1

MATTD03_A1